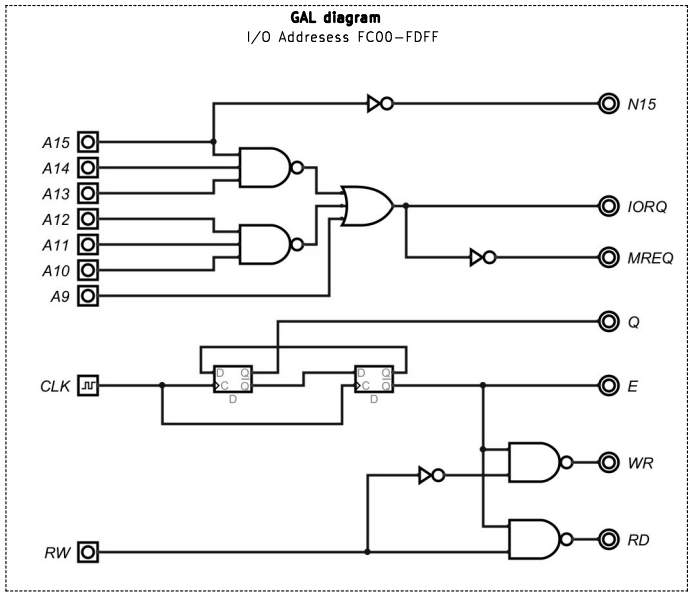

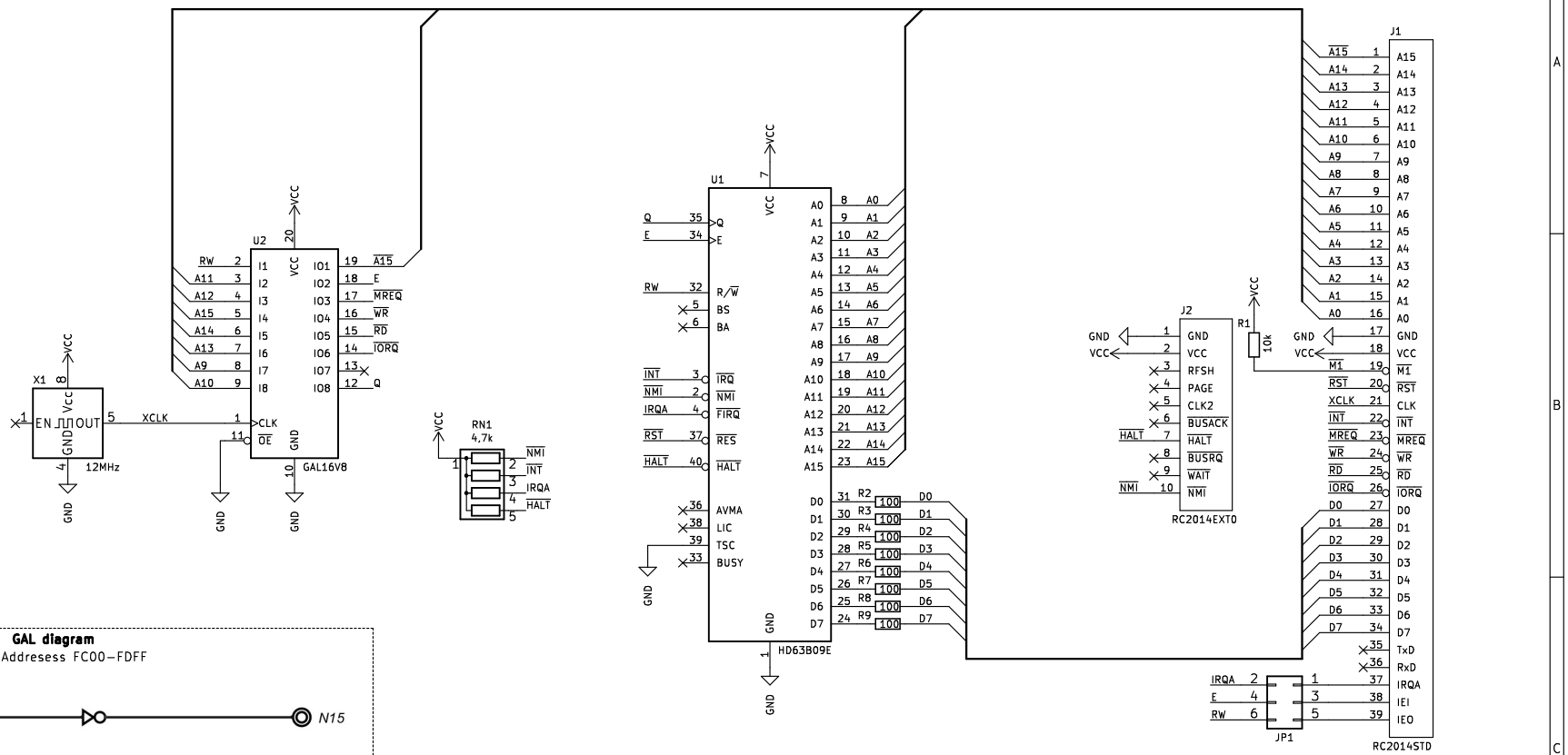

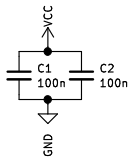

Tadeusz Pycio

Sheet: /

File: HD63C09.sch

Title: HD63C09E/MC6809E

Size: A4	Date:	**Rev: 1.0**
KiCad E.D.A. kicad (5.1.10)-1		Id: 1/1